ISAE SUPAERO

Estimation and Filtering Assignment: Study case on attitude estimation and control using a gyro-stellar hybridization filter

Author:
Lapo Calosci
Carl Spichal

February 1, 2026

Contents

1 First part
1.1 First-order continuous time model
1.1.a Block diagram and state-space representation
1.1.b Gain and state space equation of Kalman filter
1.1.c Sensor PSD computation
1.1.d Transfer functions of the Kalman filter
1.2 Second-order continuous-time model
1.2.a Block diagram and state-space representation with bias
1.2.b Optimal Kalman filter gain of a biased Kalman filter
1.2.c Transfer matrix

2 Second part
2.1 Continuous-time Kalman-filter
2.1.a Time responses of attitude and its prediction
2.1.b Continuous time Kalman filter estimator
2.1.c Standard deviations
2.2 Discrete-time Kalman-filter
2.2.a Derivation of the discretized Kalman filter
2.2.b Study of the steady Kalman gain filter
2.2.c Study of the variance p30 influence on the transient response
2.2.d Study of the parameter w influence on the steady-state response
2.2.e Study of the impact of the stellar sensor loss

Introduction

This report looks at how to estimate the pitch motion of a satellite using sensor data. The satellite's orientation is described by its pitch angle $\theta(t)$ and pitch rate $q(t) = \dot{\theta}(t)$. To measure these, two sensors are used: a stellar sensor that provides direct readings of the pitch angle, and a gyrometer that continuously measures the pitch rate but with some bias and noise.
The goal of this work is twofold:

- First, to analytically design the optimal continuous-time Kalman filter for this system in steady state, and to study how it behaves in the frequency domain. This analysis shows how the filter combines information from both sensors depending on signal frequency, acting like a second-order complementary filter.
- Second, to implement and test both the continuous-time and discrete-time versions of the Kalman filter in MATLAB-SIMULINK. The report explores how the filter responds to different tuning settings and includes a simulation of the attitude control loop. In this part, more realistic conditions are also considered, such as sensor undersampling or temporary loss of the star tracker signal, for example, when the sensor is exposed to sunlight.

Combining analytical work with simulations gives a clearer picture of how the Kalman filter performs in practice, especially when dealing with noisy, biased, or incomplete sensor data.

1 First part

Both sections will explore the analytical derivation of the Kalman model, first assuming the presence of noise, and then introducing bias in the calculation. The objective is to compute analytically the optimal continuous-time Kalman filter in steady state and to analyse its frequency-domain properties.

1.1 First-order continuous time model

The two measurements θ_m and q_m are polluted by centered independent white noises n_θ and n_q with PSD $V = v^2(rd^2s)$ and $W = w^2(rd^2/s)$, respectively.

1.1.a Block diagram and state-space representation

In this assignment, two parameters will be studied: the pitch attitude θ and the pitch rate q. The first step of building the Kalman model is to understand that measured parameters are related to the actual value of the parameter and the noise polluting them, as can be seen in Equation 2 and Equation 3:

$$q = \dot{\theta} \tag{1}$$

$$q_m = q + n_q \tag{2}$$

$$\theta_m = \theta + n_\theta \tag{3}$$

Where θ_m and q_m are respectively the measured values (sensor outputs) of the true system states θ and q. The former comes from the star tracker measurement and the latter from the gyrometer one. It is important to realize in this case that the measured pitch rate will be used as an input of the state space equation to deduce the real pitch rate in the state equation, while the real pitch attitude will be used as the state variable to obtain the measured pitch attitude. The final **block diagram** representation can be seen in Figure 1:

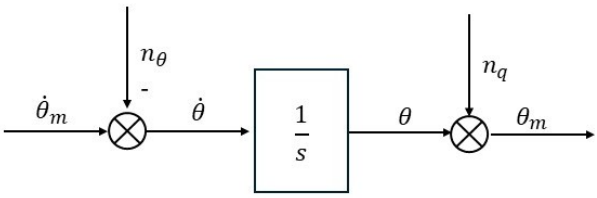

Figure 1: First order Kalman model block diagram

Finally, the following **state space representation** can be deduced with the parameters of the satellite from the previous equations:

$$\begin{cases} \dot{x}(t) = Ax(t) + Bu(t) + Mw(t) \\ y(t) = Cx(t) + Du(t) + v(t) \end{cases} \Rightarrow \begin{cases} \dot{\theta} = 0 \cdot \theta + 1 \cdot \dot{\theta_m} - n_q \\ \theta_m = 1 \cdot \theta + 0 \cdot \dot{\theta_m} + n_\theta \end{cases} \tag{4}$$

Therefore:

$$\begin{cases} A = 0 \\ B = 1 \\ C = 1 \\ D = 0 \\ M = 1 \\ w(t) = -n_q \\ v(t) = n_\theta \end{cases} \tag{5}$$

- A: System matrix: defines how the state evolves without input.
- B: Input matrix: defines how control inputs $u(t)$ affect the state.
- C: Output matrix: defines how the state maps to the measured output.
- D: Direct transmission matrix: defines direct input-to-output influence.
- M: Process noise input matrix: defines how process noise enters the state equation. In this case, $M = 1$ indicates that the noise term $w(t)$ directly affects the derivative of the state.
- $w(t)$: Process noise: represents disturbances affecting the system dynamics. Here, $w(t) = -n_q$, meaning the process noise arises from the corrupted gyro measurement $\dot{\theta}_m = \dot{\theta} + n_q$.
- $v(t)$: Measurement noise: represents noise affecting the sensor readings. In this case, $v(t) = n_\theta$, indicating that the attitude measurement is affected by noise from the stellar sensor.

1.1.b Gain and state space equation of Kalman filter

The following question consists in expressing the state-space equation of the Kalman filter as well as the filter gain in steady state. One can start by using the Ricatti equation with the parameters obtained in the previous question. In steady state (stationary regime), one must remember that the time derivative of the covariance matrix $\dot{P}(t)$ is 0:

$$\dot{P} = AP + PA^T - PC^T V^{-1} CP + W = 0 \tag{6}$$

As obtained in the previous question, A and C are respectively equal to 0 and 1, meaning that the equation simplifies to the following:

$$-P^2 V^{-1} + W = 0 \;\Rightarrow\; P = \sqrt{WV} \tag{7}$$

Using the definition of the **Kalman gain**, one can deduce its formula:

$$K = PC^{\mathsf{T}} V^{-1} = \sqrt{\frac{W}{V}} \tag{8}$$

Now that the Kalman gain has been obtained, the **Kalman filter state-space equation** can be written as follows:

$$\dot{\hat{x}} = A\hat{x} + Bu + K(y - (C\hat{x} + Du)) \tag{9}$$

where $\hat{x}$ is the estimated state vector in the Kalman filter, in our case equal to $\hat{\theta}$. Moreover, the equation is split into two parts, the $A\hat{x} + Bu$ term that represents the prediction of the output, and the correction term $K(y - (C\hat{x} + Du))$, which is a multiplication of the Kalman gain K by the innovation, also known as what the filter adds to the prediction. Therefore, the gain K weights the correction with respect to the prediction term. For this reason, if the model is good (W is small) and the measurement noise V is high, K must be small. On the contrary, if the model is not good (W is big) and the measurement noise V is small, then K must be big. Equation 9 can also be written as:

$$\dot{\hat{x}}(t) = A\hat{x}(t) + \begin{bmatrix} B & K \end{bmatrix} \begin{bmatrix} u(t) \\ y(t) \end{bmatrix} \tag{10}$$

1.1.c Sensor PSD computation

Now that the theoretical formulae have been obtained, one can plug in some numerical values, starting with the PSD of the low-cost sensor. One knows that the unit of PSD V is expressed in rad^2s, meaning that the value can be obtained using the measurement frequency of 10 Hz and the error standard deviation of one degree:

$$\text{PSD}(V) = \frac{(1^\circ \cdot \frac{\pi}{180})^2}{10Hz} = 3.046 \cdot 10^{-5} rad^2 s \tag{11}$$

One can then solve for the PSD of the gyrometer assuming the attitude estimation is lower than 10' in a 2σ confidence interval:

$$2\sigma < 10\text{arcmin} \tag{12}$$

Knowing then that the covariance P_∞ is the standard deviation squared of the estimation error, one can plug in the numerical value obtained above and convert into rad^2:

$$P_\infty = \sigma_\infty^2 = \left(\frac{10}{2}\text{arcmin}\right)^2 = \left(5 \cdot \frac{1}{60} \cdot \frac{\pi}{180}\right)^2 \approx 2.25 \cdot 10^{-6} rad^2 \tag{13}$$

Finally, using the derived Equation 7 from the previous question, the PSD W of the gyrometer is equal to:

$$P_\infty = \sqrt{VW} \Rightarrow W = \frac{P_\infty^2}{V} = \frac{(2.25 \cdot 10^{-6})^2}{3.046 \cdot 10^{-5}} = 1.6 \cdot 10^{-7} rad^2 s^{-1} \tag{14}$$

1.1.d Transfer functions of the Kalman filter

In this question, the transfer functions of the Kalman filter is computed. In this case, Equation 9 is:

$$\begin{aligned} \dot{\hat{\theta}} &= q_m + K(\theta_m - \hat{\theta}) \\ \dot{\hat{\theta}} &= \omega_{gyr} + K(\theta_{SST} - \hat{\theta}) \end{aligned} \tag{15}$$

and θ_m and q_m are equivalent respectively to θ_{SST} and ω_{gyr}. In the Laplace domain, one obtains:

$$s\hat{\theta} = \omega_{gyr} + K(\theta_{SST} - \hat{\theta}) \Rightarrow (s+K)\hat{\theta} = \omega_{gyr} + K\theta_{SST} \tag{16}$$

$$\hat{\theta} = \frac{1}{s+K}\omega_{gyr} + \frac{K}{s+K}\theta_{SST} = \frac{s}{s+K}\theta_{gyr} + \frac{K}{s+K}\theta_{SST} \tag{17}$$

Therefore the **transfer functions of the Kalman filter** are:

$$\frac{\hat{\theta}}{\theta_{SST}}(s) = \frac{K}{s+K}, \quad \frac{\hat{\theta}}{\theta_{gyr}}(s) = \frac{s}{s+K} \tag{18}$$

The Bode diagram of these transfer functions is:

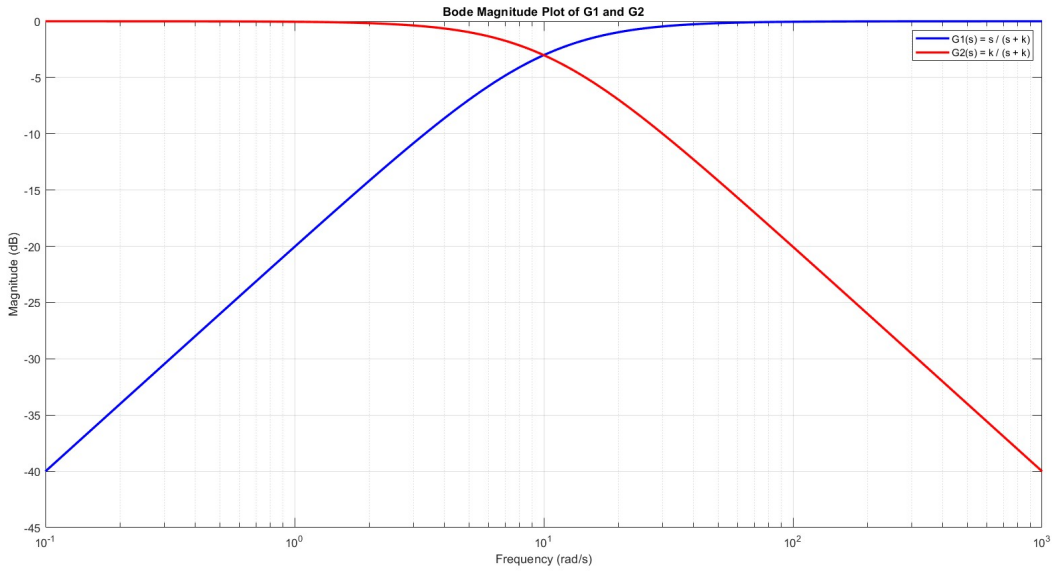

Figure 2: Bode magnitude plots of the gyroscope pitch rate and star tracker pitch transfer functions

Therefore, the system uses a combination of a low-pass filter ($\frac{\hat{\theta}}{\theta_m}(s)$) and a high-pass filter ($\frac{\hat{\theta}}{q_m}(s)$) to estimate the true state. The low-pass filter smoothens noisy attitude measurements θ_m, keeping only low-frequency components, while the high-pass filter removes slow variations from the angular velocity measurement q_m, capturing the fast dynamics. Since each filter is reliable in different frequency ranges, their combination forms a complementary filter. The low-pass filter provides long-term stability, while the high-pass filter ensures responsiveness.

1.2 Second-order continuous-time model

It is now assumed the gyrometer is no longer noised but its reading q_m is biased with an unknown bias $b(t)$: $q_m(t) = q(t) + b(t)$. To compensate for the fact that the bias may have a drift, its derivative in time is equated with a centered white noise: $\dot{b} = 0 + n_b$. The noise PSD of n_b is $W = w^2\ (\mathrm{rd}^2/\mathrm{s}^3)$.

1.2.a Block diagram and state-space representation with bias

Now that the analysis of the unbiased Kalman filter has been done, some bias will be introduced in the model. The first consequence of this is the introduction of a second state output in the model, the bias itself. The state output, the measured attitude θ_m, remains unchanged. In order to express the Kalman model, one can make use of the equations that describe the evolution of the variables that define the state of the spacecraft and the evolution of the sensor measurements:

$$\begin{cases} \theta_m = \theta + n_\theta \\ \dot{\theta} = q_m - b \\ \dot{b} = n_b \end{cases} \tag{19}$$

The state of this Kalman model will be denoted as $x(t) = [\theta(t) \quad b(t)]^T$.
This results in the following **state space representation of the new Kalman model**:

$$\begin{cases} \begin{bmatrix} \dot{\theta} \\ \dot{b} \end{bmatrix} = \underbrace{\begin{bmatrix} 0 & -1 \\ 0 & 0 \end{bmatrix}}_{A} \begin{bmatrix} \theta \\ b \end{bmatrix} + \underbrace{\begin{bmatrix} 1 \\ 0 \end{bmatrix}}_{B} q_m + \underbrace{\begin{bmatrix} 0 \\ 1 \end{bmatrix}}_{M} n_b, \\ \theta_m = \underbrace{\begin{bmatrix} 1 & 0 \end{bmatrix}}_{C} \begin{bmatrix} \theta \\ b \end{bmatrix} + \underbrace{0}_{D} q_m + n_\theta \end{cases} \tag{20}$$

The **new block diagram** is slightly modified compared to before, as the pitch rate corresponds this time to the difference between the measured pitch rate and the bias, defined as the integral of a central white noise:

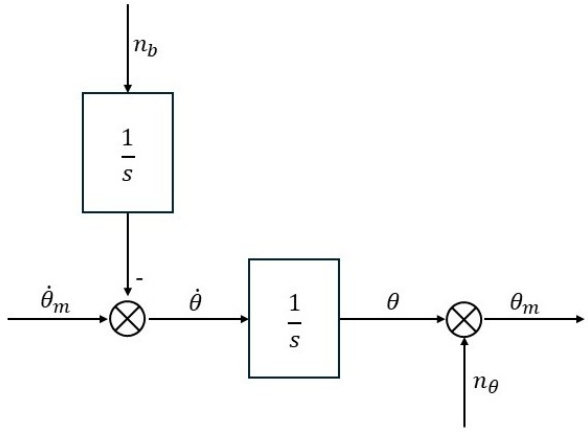

Figure 3: Second order Kalman model block diagram

1.2.b Optimal Kalman filter gain of a biased Kalman filter

The next step consists in determining the variance of the state estimation error P in steady state of a biased estimator. In order to do so, one must solve the Ricatti equation in steady state (when $\dot{P} = 0$), in other words with a gain equal to $PC^{\mathsf{T}}V^{-1}$ (see section 3.2.1 of the "Introduction to Kalman filtering" guidebook [1].):

$$\dot{P} = AP + PA^T - PC^TV^{-1}CP + BWB^T = 0 \tag{21}$$

where $BWB^T = W$ and P is always symmetric. Plugging in matrices A, C and W then leads to the following formula:

$$\begin{bmatrix} 0 & -1 \\ 0 & 0 \end{bmatrix} \begin{bmatrix} p_{11} & p_{12} \\ p_{12} & p_{22} \end{bmatrix} + \begin{bmatrix} p_{11} & p_{12} \\ p_{12} & p_{22} \end{bmatrix} \begin{bmatrix} 0 & -1 \\ 0 & 0 \end{bmatrix} - \frac{1}{V} \begin{bmatrix} p_{11} & p_{12} \\ p_{12} & p_{22} \end{bmatrix} \begin{bmatrix} 1 & 0 \\ 0 & 0 \end{bmatrix} \begin{bmatrix} p_{11} & p_{12} \\ p_{12} & p_{22} \end{bmatrix} + \begin{bmatrix} 0 & 0 \\ 0 & w^2 \end{bmatrix} = 0 \tag{22}$$

Solving for the individual components:

$$\begin{cases} -2p_{12} - \frac{p_{11}^2}{V} = 0, \\ p_{22} - \frac{p_{11}p_{12}}{V} = 0, \\ -\frac{p_{12}^2}{V} + W = 0 \end{cases} \Rightarrow \begin{cases} p_{12}^2 = VW, \\ p_{12} = \pm\sqrt{VW}, \\ p_{22} = -\frac{p_{11}p_{12}}{V}. \end{cases} \tag{23}$$

Reorganized into a matrix, the final solution of the **variance P** is as follows:

$$P = \begin{bmatrix} \sqrt{2}V^{\frac{3}{4}}W^{\frac{1}{4}} & -V^{\frac{1}{2}}W^{\frac{1}{2}} \\ -V^{\frac{1}{2}}W^{\frac{1}{2}} & \sqrt{2}V^{\frac{1}{4}}W^{\frac{3}{4}} \end{bmatrix} \tag{24}$$

The final solution of P can then be plugged into the optimized formula of the **Kalman gain** matrix:

$$K_f = PC^TV^{-1} = \begin{bmatrix} \sqrt{2\sqrt{\frac{W}{V}}} \\ -\sqrt{\frac{W}{V}} \end{bmatrix} = \begin{bmatrix} k_\theta \\ k_b \end{bmatrix} \tag{25}$$

The Kalman gain K_f can now be used to formulate the estimator dynamics. According to the standard continuous-time Kalman filter structure, the estimated state vector $\hat{x}(t) = [\hat{\theta}(t) \quad \hat{b}(t)]^T$ evolves according to the system model. The input q_m is treated as a known measurement, while θ_m is used in the correction term. This leads to the following state-space equations of the Kalman filter that introduces the bias:

$$\begin{cases} \begin{bmatrix} \dot{\hat{\theta}} \\ \dot{\hat{b}} \end{bmatrix} = \begin{bmatrix} 0 & -1 \\ 0 & 0 \end{bmatrix} \begin{bmatrix} \hat{\theta} \\ \hat{b} \end{bmatrix} + \begin{bmatrix} 1 \\ 0 \end{bmatrix} q_m + \begin{bmatrix} k_\theta \\ k_b \end{bmatrix} \left(\theta_m - \begin{bmatrix} 1 & 0 \end{bmatrix} \begin{bmatrix} \hat{\theta} \\ \hat{b} \end{bmatrix} \right) \\ \\ \begin{bmatrix} \hat{\theta} \\ \hat{q} \end{bmatrix} = \begin{bmatrix} 1 & 0 \\ 0 & -1 \end{bmatrix} \begin{bmatrix} \hat{\theta} \\ \hat{b} \end{bmatrix} + \begin{bmatrix} 0 \\ 1 \end{bmatrix} q_m \end{cases} \tag{26}$$

[1] Särkkä, Simo. *Introduction to Kalman Filtering and Smoothing*, October 19, 2019.

1.2.c Transfer matrix

In this question, it is required to compute the transfer matrix $Z(s)$ of the Kalman filter, relating the measurement inputs θ_m and q_m to the estimated outputs $\hat{\theta}$ and $\hat{q}$.
The **estimation equations** of the Kalman filter, now augmented with the output $\hat{q} = q_m - \hat{b}$, is:

$$\begin{cases} \hat{q} = q_m - \hat{b} \\ \dot{\hat{\theta}} = -\hat{b} + q_m + k_\theta(\theta_m - \hat{\theta}) \\ \dot{\hat{b}} = k_b(\theta_m - \hat{\theta}) \end{cases} \tag{27}$$

To compute the transfer function from the inputs θ_m and q_m to the outputs $\hat{\theta}$ and $\hat{q}$, the Laplace domain is used. From the third equation, one can express $\hat{b}(s)$ as:

$$s\hat{b} = k_b(\theta_m - \hat{\theta}) \quad \Leftrightarrow \quad \hat{b} = \frac{k_b}{s}(\theta_m - \hat{\theta}) \tag{28}$$

Using the second equation and the one just derived:

$$s\hat{\theta} = -\hat{b} + q_m + k_\theta(\theta_m - \hat{\theta}) \quad \Leftrightarrow \quad s\hat{\theta} = -\frac{k_b}{s}(\theta_m - \hat{\theta}) + q_m + k_\theta(\theta_m - \hat{\theta}) \tag{29}$$

This equation is then rearranged to isolate $\hat{\theta}$ in terms of θ_m and q_m:

$$\hat{\theta} = \frac{k_\theta s - k_b}{s^2 + k_\theta s - k_b}\theta_m + \frac{s}{s^2 + k_\theta s - k_b}q_m \tag{30}$$

The estimate $\hat{q}$ is then recovered using the definition $\hat{q} = q_m - \hat{b}$, where $\hat{b}$ is again expressed in terms of $\theta_m - \hat{\theta}$:

$$\hat{q} = q_m - \frac{k_b}{s}(\theta_m - \hat{\theta}) \tag{31}$$

Substituting the expression for $\hat{\theta}$, one obtains:

$$\hat{q} = -\frac{k_b s}{s^2 + k_\theta s - k_b}\theta_m + \frac{s^2 + k_\theta s}{s^2 + k_\theta s - k_b}q_m \tag{32}$$

Finally, the complete **transfer matrix Z(s)** of the Kalman filter is constructed, linking the measurement vector $\begin{bmatrix}\theta_m & q_m\end{bmatrix}^T$ to the estimated outputs $\begin{bmatrix}\hat{\theta} & \hat{q}\end{bmatrix}^T$:

$$\begin{bmatrix}\hat{\theta} \\ \hat{q}\end{bmatrix} = \begin{bmatrix} \frac{k_\theta s - k_b}{s^2 + k_\theta s - k_b} & \frac{s}{s^2 + k_\theta s - k_b} \\ \frac{-k_b s}{s^2 + k_\theta s - k_b} & \frac{s^2 + k_\theta s}{s^2 + k_\theta s - k_b} \end{bmatrix} \begin{bmatrix}\theta_m \\ q_m\end{bmatrix} \tag{33}$$

This matrix 2×2 $Z(s)$ describes how the filter processes angle and gyro measurements to produce the corresponding state estimates. In particular, it can be seen that it is still a complementary filter as before. Indeed, looking for example at Equation 30, it can be rewritten as:

$$\hat{\theta} = \left(1 - \frac{s^2}{s^2 + k_\theta s - k_b}\right)\theta_m + \frac{s^2}{s^2 + k_\theta s - k_b}\frac{q_m}{s} \tag{34}$$

and here it is easy to identify that:

$$f_1(s) = 1 - \frac{s^2}{s^2 + k_\theta s - k_b}, \quad f_2(s) = \frac{s^2}{s^2 + k_\theta s - k_b} \Rightarrow f_1(s) + f_2(s) = 1 \tag{35}$$

By plotting the Bode diagram of these transfer functions the complementary nature of the filter can be seen (where V and W are chose equal to 1 for simplicity).

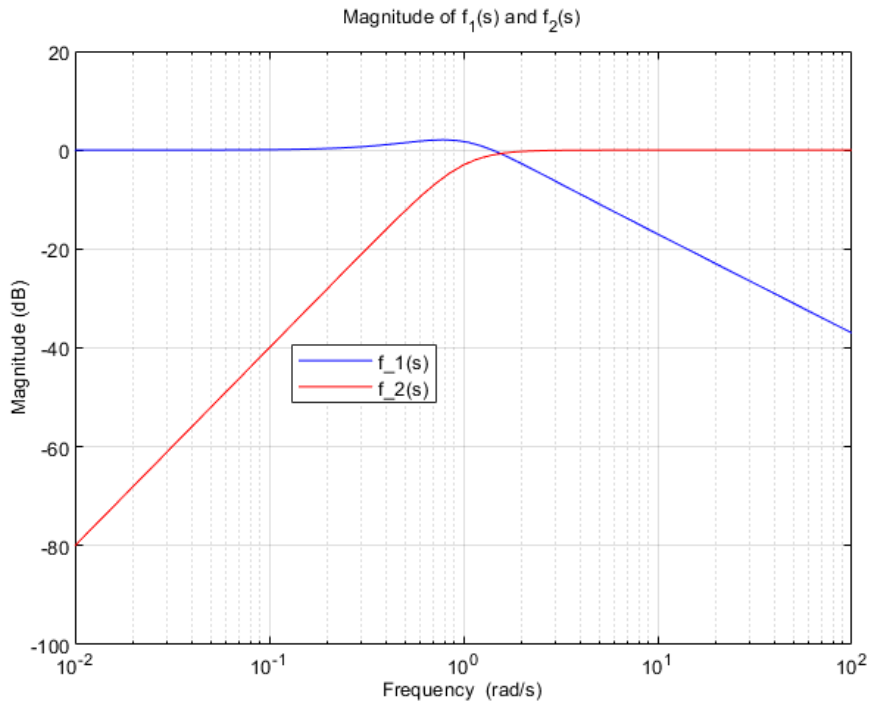

Figure 4: Bode plots of the transfer functions for $\hat{\theta}$.

The same analysis can be done with Equation 32:

$$\hat{q} = -\frac{k_b}{s^2 + k_\theta s - k_b}\,\theta_m s + \left(1 + \frac{k_b}{s^2 + k_\theta s - k_b}\right) q_m \tag{36}$$

Here, the transfer functions from the inputs θ_m and q_m to the estimated rate $\hat{q}$ can be identified as:

$$f_1(s) = -\frac{k_b}{s^2 + k_\theta s - k_b}, \quad f_2(s) = \left(1 + \frac{k_b}{s^2 + k_\theta s - k_b}\right) \tag{37}$$

As shown in the Bode diagram, $f_1(s)$ behaves as a second-order low-pass filter applied to the derivative of the angle measurement, while $f_2(s)$ acts as a high-pass filter applied to the gyro signal. Their combination reconstructs the angular rate $\hat{q}$ in a complementary way.

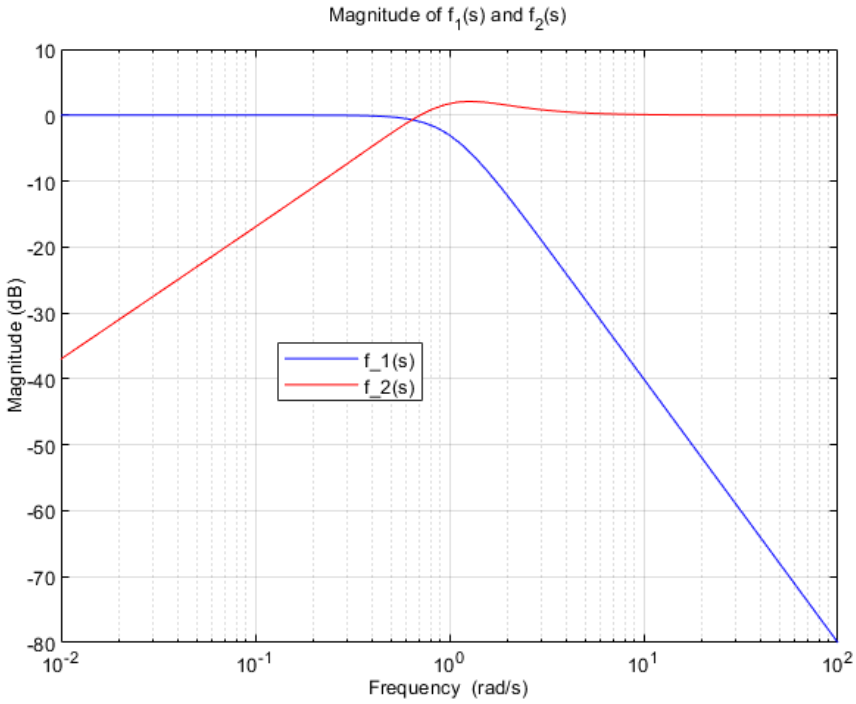

Figure 5: Bode plots of the transfer functions for $\hat{q}$.

To wrap up, the transfer matrix $Z(s)$ highlights how the Kalman filter combines information from both the star tracker and the gyrometer. The estimated outputs $\hat{\theta}$ and $\hat{q}$ are formed by combining low-pass and high-pass filtered versions of the measurements θ_m and q_m. The two filters always sum to one, meaning the estimator constantly shifts trust between the two sensors depending on the frequency of the input signals. This behavior is the same analyzed in subsubsection 1.1.d.
At low frequencies, the filter relies more on the star tracker, which provides stable but slower measurements. At higher frequencies, it shifts toward the gyrometer, which reacts quickly but is affected by noise and bias. This behavior is governed by a natural crossover frequency:

$$\omega_n = \sqrt{\frac{W}{V}},$$

where W and V represent the noise levels of the gyrometer and the star tracker, respectively. Around this frequency, the Kalman filter balances the information coming from both sensors.
This can also be seen by rewriting the denominator of the transfer functions as a standard second-order system:

$$s^2 + k_\theta s - k_b = s^2 + 2\zeta\omega_n s + \omega_n^2,$$

where the damping ratio $\zeta \approx \frac{\sqrt{2}}{2} = 0.7071$ ensures a well-behaved transition between the two sensors. This structure turns the Kalman filter into a second-order complementary filter, and combines the low-frequency accuracy of the star tracker with the high-frequency responsiveness of the gyrometer, creating a reliable and robust estimate in all operating conditions.

2 Second part

Numerical constants: $J = 1\ Kgm^2, \tau = 0.1\ s, K_p = 1\ Nm/rd, K_v = 1.5\ Nms/rd, V = 0.01\ rd^2 s.$

In this second part, the objective is to implement the continuous-time Kalman filter and the discrete-time Kalman filter using Matlab-Simulink and to analyze the filter behavior for various values of the tuning parameters. An attitude servo-loop will be also taken into account. In the discrete-time case, the non-stationary behavior of the Kalman filter will also be analysed. This filter will also take into account an under-sampling of the stellar sensor and the fact that the measurement of this stellar sensor could not be available.

2.1 Continuous-time Kalman-filter

Firstly, a continuous-time model will be examined, focusing first on the impact of various disturbances on the measurements. Next, a Kalman filter will be applied to enhance the controller, analyzing the effect of the parameter w while addressing the gyro's bias. The goal is to maintain the estimations within a reliable confidence interval of $\pm 3\sigma$.
In the given Simulink file `gyro_SST_continuous.slx`, depicted in Figure 6, the navigation filter initially considers the direct measurements as estimates: $\hat{\theta} = \theta_m$ and $\hat{q} = q_m$.

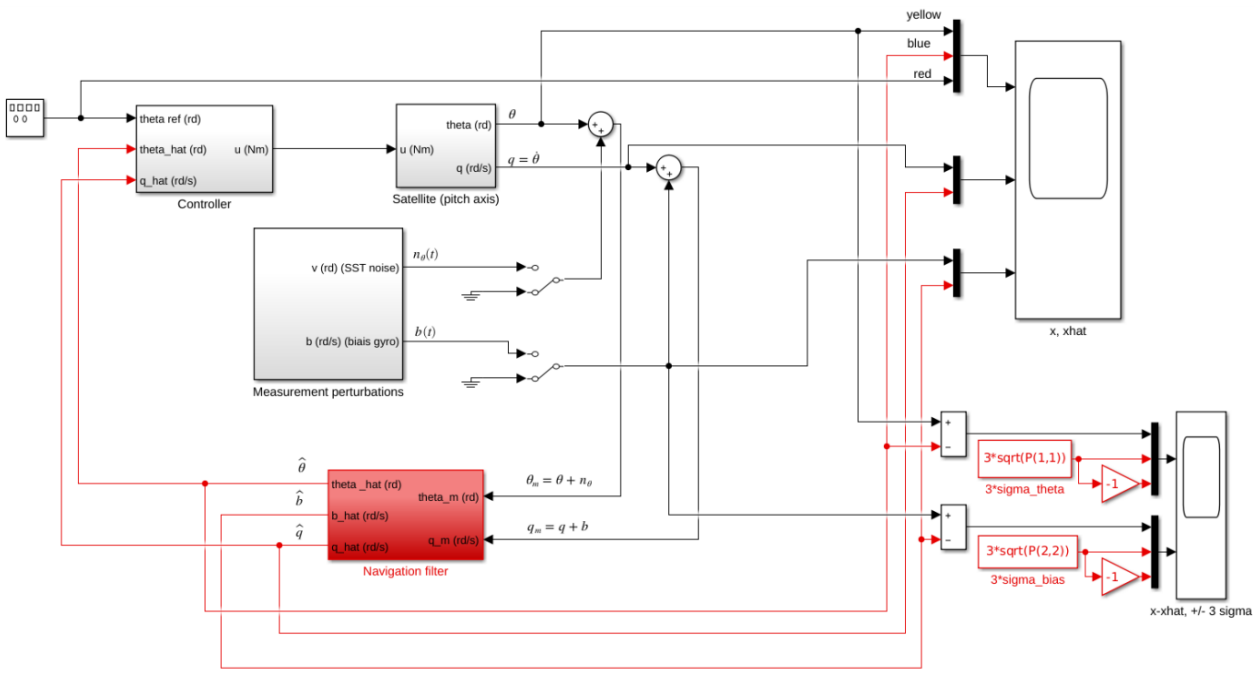

Figure 6: Simulink file for the attitude control and estimation

The inertia of the satellite around the pitch axis is denoted J (Kgm^2). The reaction wheel can deliver a torque u (Nm) around the pitch-axis to control the attitude of the satellite. The model of this actuator is a first order: $A(s) = \frac{1}{1+\tau s}$, and it is implemented in Simulink as follow:

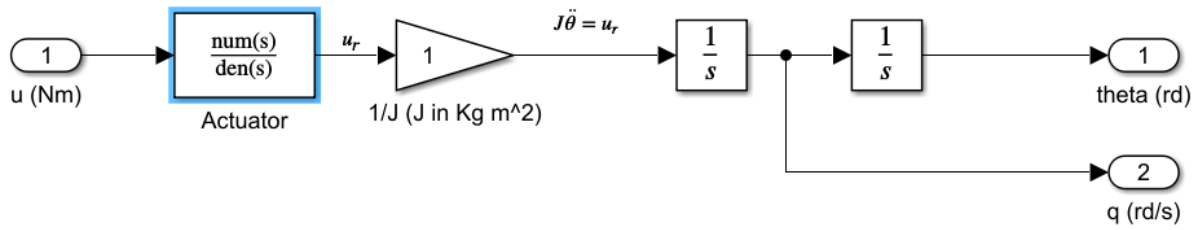

Figure 7: Actuators block

Finally, the attitude θ is servo-looped on a reference θ_{ref} by a proportional derivative control law:

$$u = K_p(\theta_{\text{ref}} - \hat{\theta}) - K_v\hat{q}. \tag{38}$$

that it's implemented in Simulink as follow:

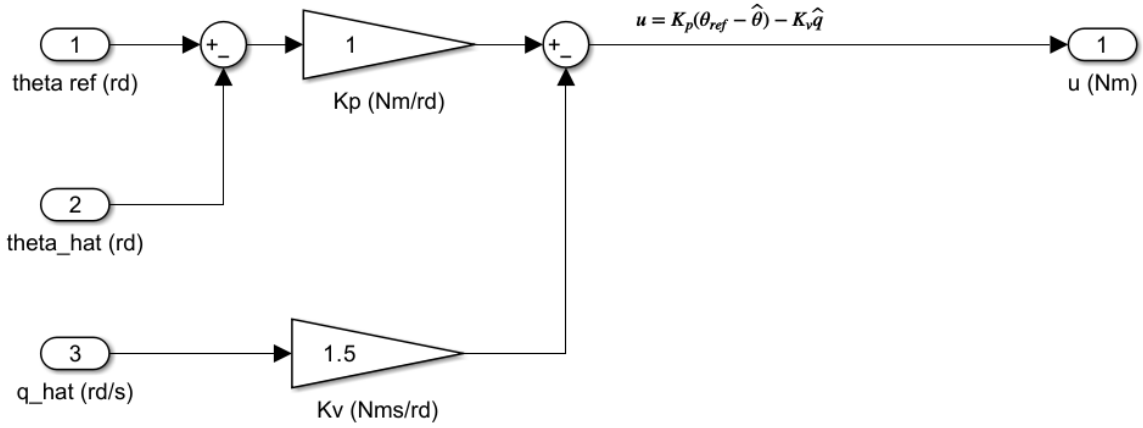

Figure 8: Proportional derivative controller

The block where the Kalman filter will be placed is the red one in Figure 6 and has the following structure:

Figure 9: Kalman filter block

The noise and bias block contains simply:

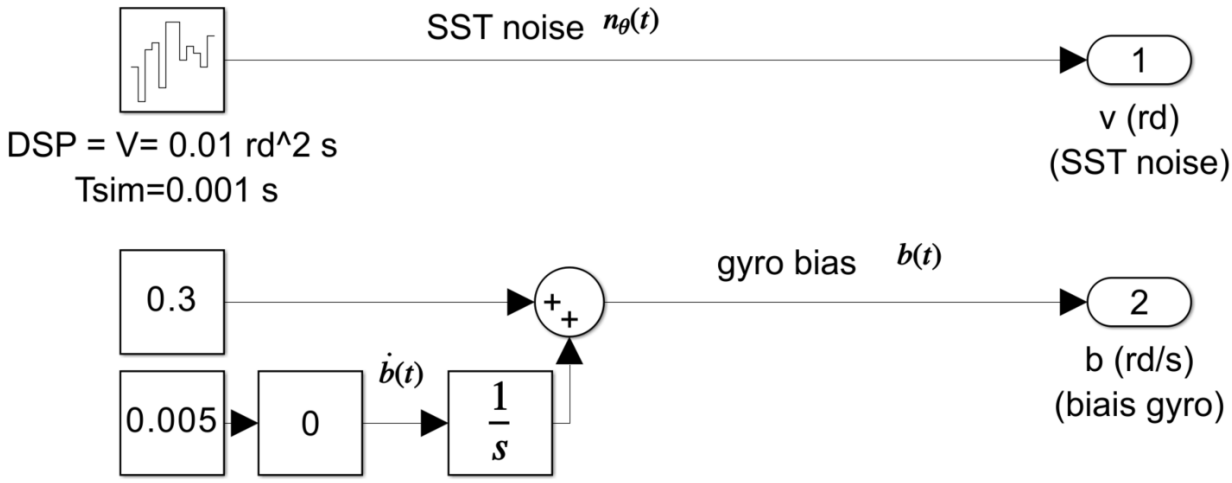

Figure 10: Noise and bias blocks

2.1.a Time responses of attitude and its prediction

In this question, we have to analyze the time-responses of the attitude and its estimate for various measurement configurations using the manual switches on the outputs of the block `Measurement perturbations`.

Measurements are perfect

In this case, the estimated attitude $\hat{\theta}$ (blue) is, of course, in perfect synchronization with the real attitude θ (red), and no discrepancy is visible. The reference attitude θ_{ref} (black) commands the system, and the estimated attitude follows it with some delay given by the controller. Thus, the estimated pitch rate $\hat{q}$ (blue) is equal to the q (red). As the measurements are perfect, there is no bias to be estimated.

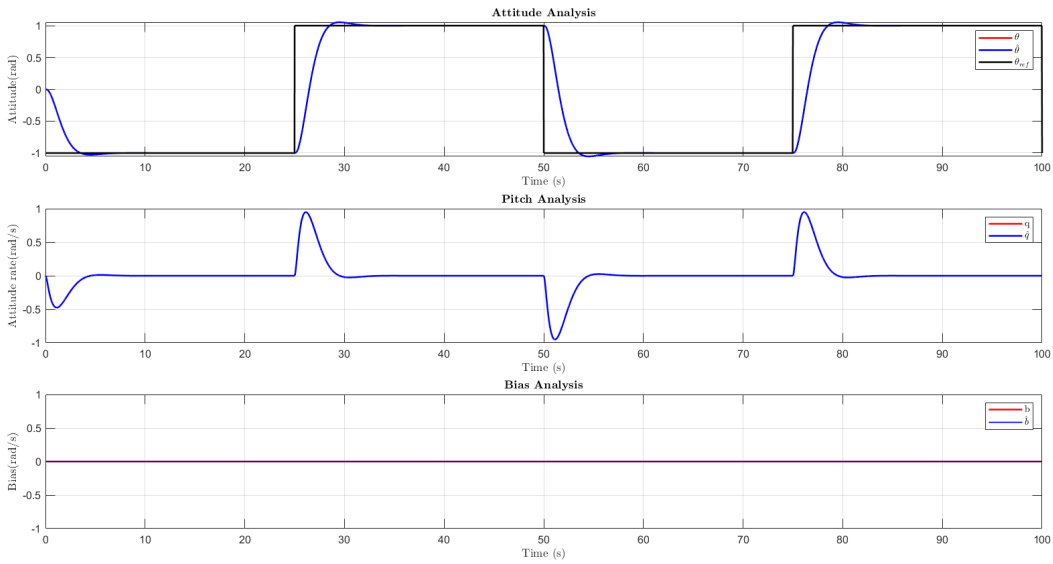

Figure 11

With gyro bias

When the bias is introduced (Figure 12), it can be noticed that both the attitude and the angular rate estimations are vertically displaced by a constant value; this value is exactly the bias, which can be seen at in the bottom graph.

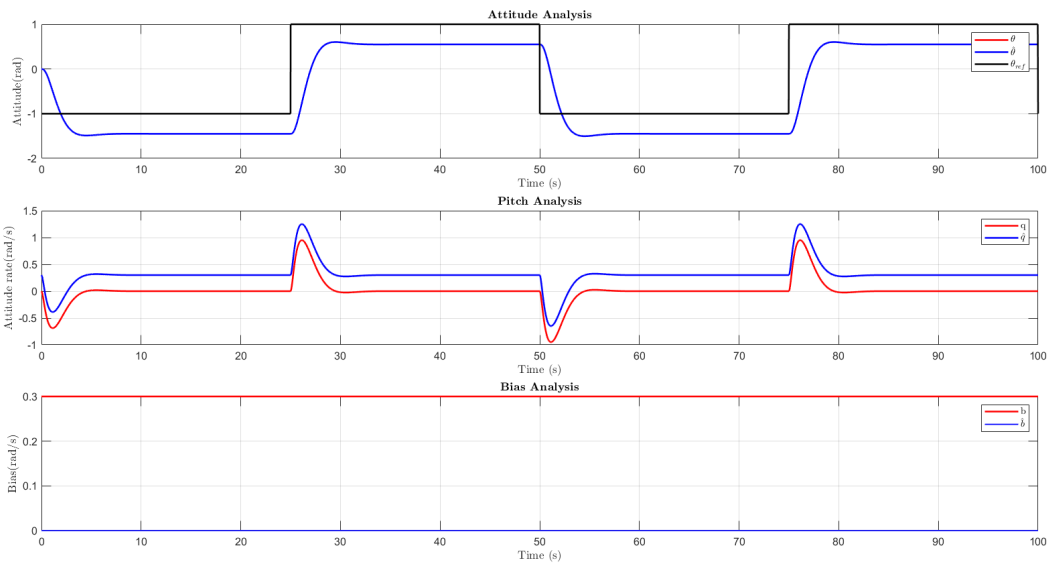

Figure 12

With star-tracker noise

In this case, white noise is added to the SST measurements while the gyrometer bias is removed. As shown in Figure 13, the estimated attitude $\hat{\theta}$ becomes significantly corrupted by the measurement noise, making it difficult to assess its effect on the actual attitude signal. The high-frequency noise in the estimate dominates the output, highlighting the impact of relying solely on a noisy star tracker measurement.

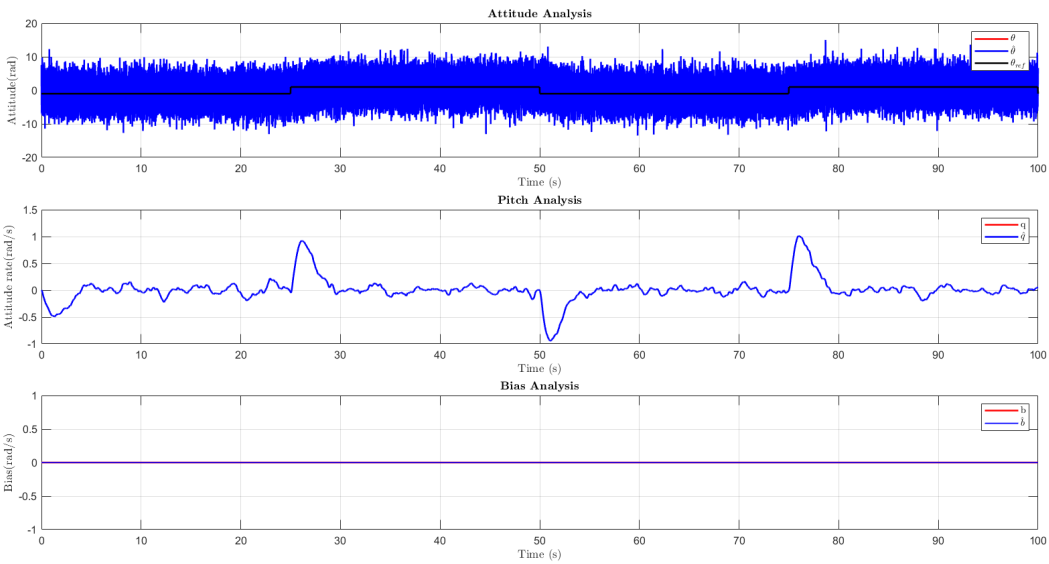

Figure 13

2.1.b Continuous time Kalman filter estimator

Now, the Kalman filter is applied, and its block of the Kalman filter is the red one in Figure 6 and has the following structure:

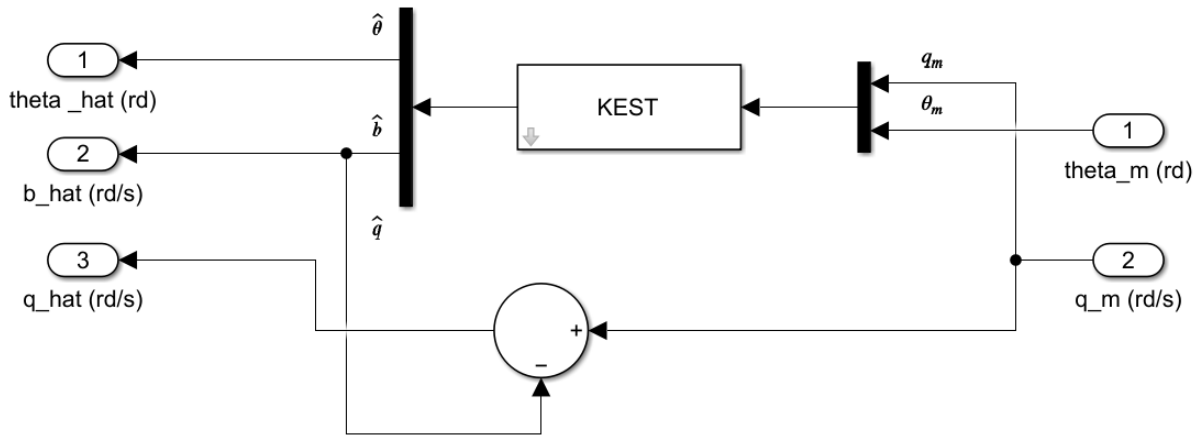

Figure 14: Kalman filter block

$\hat{q}$ has to be properly be re-written as: $\hat{q} = q_m - \hat{b}$ following Equation 27. The noise and bias block contains this time two ramps, to study better the dynamics of the bias:

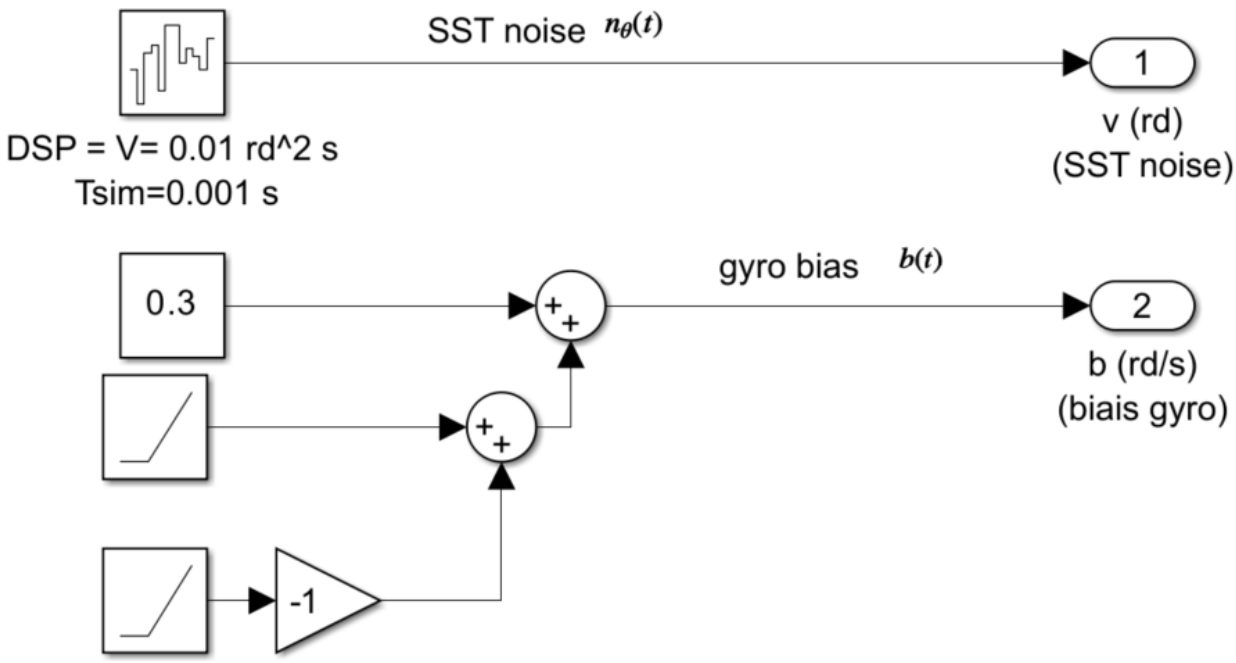

Figure 15: Noise and bias blocks

The matrices of the Kalman model were computed before in Equation 27.

$$A = \begin{bmatrix} 0 & -1 \\ 0 & 0 \end{bmatrix}, \quad B = \begin{bmatrix} 1 \\ 0 \end{bmatrix}, \quad M = \begin{bmatrix} 0 \\ 1 \end{bmatrix}, \quad C = \begin{bmatrix} 0 & 0 \end{bmatrix}, \quad D = 0 \tag{39}$$

In the used MATLAB code, first the line `sys = ss(A,[B M],C,[D H])` creates a state-space (SS) model of the dynamic Kalman system (using the matrices above), and then the line `[KEST, L, P] = kalman(sys, W, V)` creates a Kalman filter for the state-space system `sys`, using gyro process noise PSD W (where $w = \sqrt{W}$) and SST noise PSD $V = 0.01$ (where $v = \sqrt{V}$). It returns the Kalman estimator `KEST`, the Kalman gain `L` (equivalent to K_f), and the steady-state error covariance `P`. Usually, in Kalman filter theory, W and V are commonly used to denote the covariance matrices of the process and measurement noise, respectively. In continuous-time settings or frequency-domain analysis, the PSDs of the noise processes $w(t)$ and $v(t)$ can be related to W and V, and this is what has been done.

It is now important to remind that, for a given model (matrices A, B, M, C, D), the gain K_f and its evolution only depend on the 3 matrices describing the confidence in:

- the model: the PSD W ,
- the measurement: the PSD V ,
- the initialization of $\hat{x}(t_0) : P(t_0)$ (initial covariance of the estimation error).

Therefore, by tuning these parameters, one can obtain the desired result. In particular, comparing W and V, the estimation will be smoother if W is small with regard to V (the model is trusted more than the measurement), but the response to a disturbance (represented by w) will be slower to be corrected. So, also the parameter w, representing the process noise covariance in the Kalman filter, influences estimator performance. A small $w = 0.0001$ indicates high confidence in the model, reducing the Kalman gain K_f, leading to a slow response to tracking bias changes, as seen in Figure 16a where the estimator lags during bias ramps. In contrast, a large $w = 1.0000$ reflects low model confidence, increasing K_f, but makes the estimator overly sensitive to measurement noise, resulting in erratic and unstable estimates, as shown in Figure 16b.

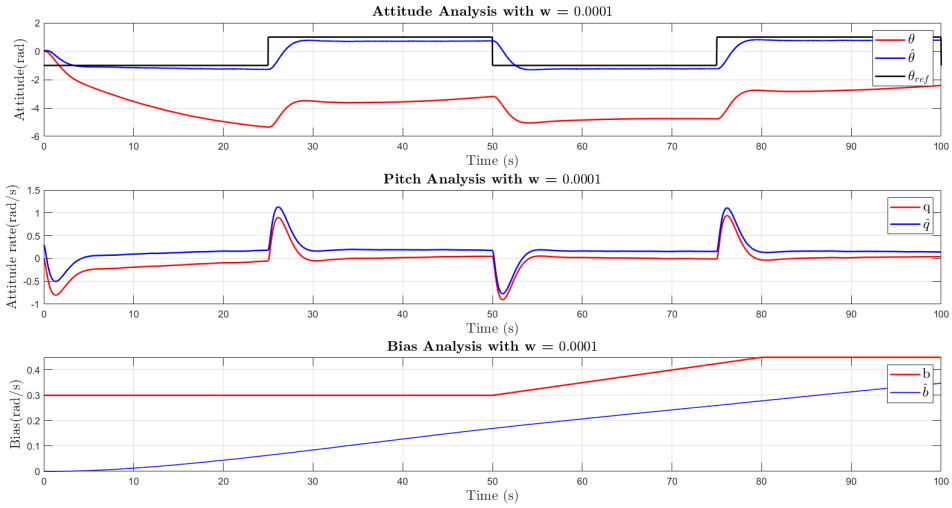

(a) Time analysis with weak estimator: $w = 0.0001$

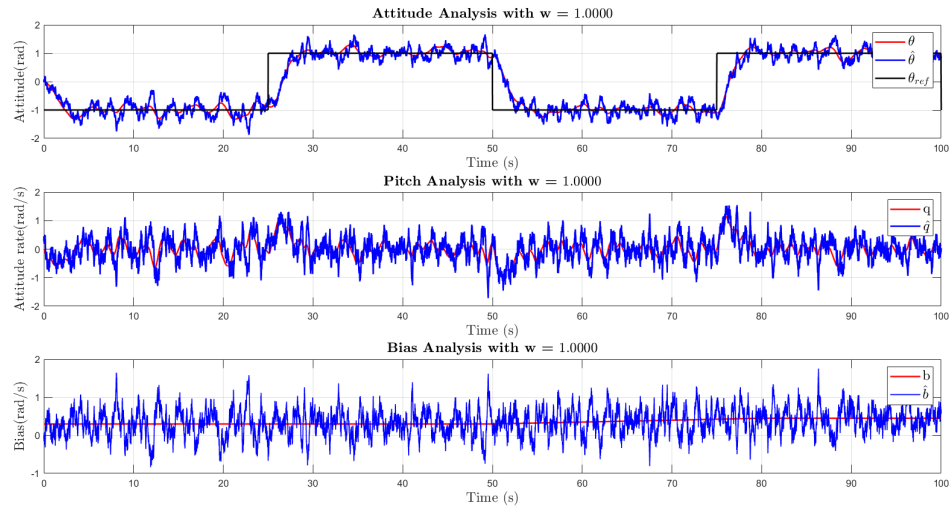

(b) Time analysis with strong estimator: $w = 1$

Figure 16: Confront of time responses for two different values of w

As a trade-off, a value of $w = 0.01$ is set, as shown in Figure 18. The Kalman filter provides a well-balanced solution for the control, because it effectively bridges the gap between the sluggish response of $w = 0.0001$ and the overly noisy estimates of $w = 1$. This value allows the estimator to track attitude, pitch rate, and bias with a quicker response to changes, such as bias ramps and step inputs, in order to ensure the system keeps up without lagging too far behind. At the same time, it keeps the noise sensitivity in check, and it delivers smoother and more stable estimates compared to the noisy behavior seen with a larger w.

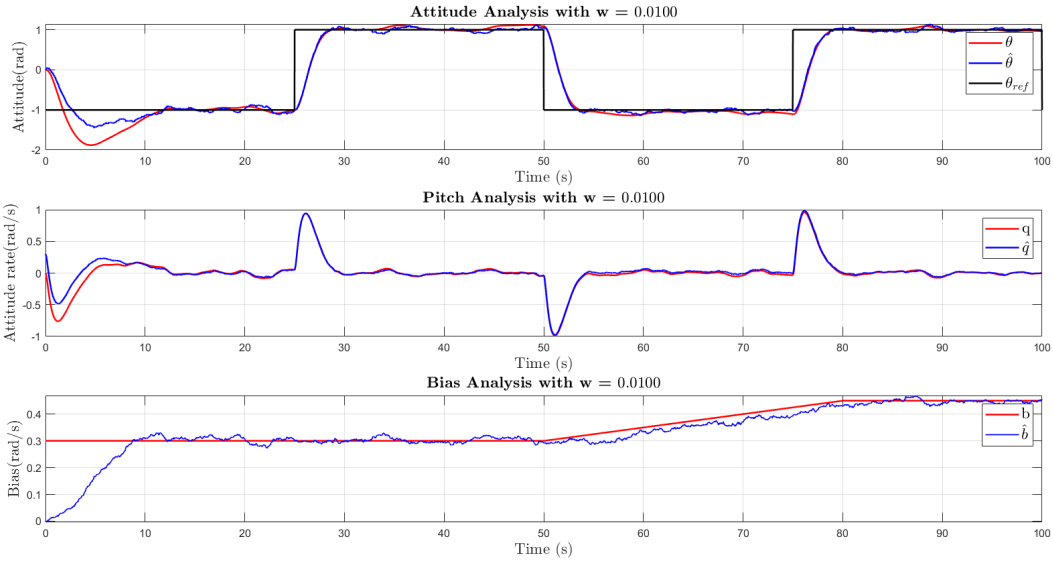

Figure 17: Time analysis with strong estimator: $w = 0.01$

Filter Dynamics and Frequency domain responses

Let's now understand the filter dynamics using the function `[Wn, z] = damp(KEST)`. It computes the natural frequencies and damping ratios of the system's poles, which provide insight into the system's stability and transient response. In particular, the natural frequency w_n indicates how fast the system responds (higher w_n means faster oscillations or decay). The damping ratio z indicates the nature of the response (oscillatory, critically damped, or overdamped). In this case, the values $w_n = 0.3162\,\text{rad/s} = 0.05$ Hz and $z = 0.7071$ (which is very close to the value that usually minimizes time response with no oscillations: 0.7) from the `damp` function reveal that the Kalman estimator (`KEST`) has a slow response with a period of $\sim 20\,\text{seconds}(= \frac{1}{0.05\ \text{Hz}})$, good for the control of the satellite, and is underdamped, showing moderate oscillations that decay over time. This behavior, driven by complex-conjugate poles at $-0.2236 \pm i0.2236$, reflects the small $W = 0.0001$, and thus reduces the Kalman gain, prioritizing the model over noisy measurements for a stable, balanced response.
Moreover, the natural frequency w_n that was just presented can be approximated by analyzing the ratio between the process noise and the measurement noise. Indeed, the Kalman filter behaves like a second-order low-pass filter, and its dynamics depend (as was seen before) on the balance between how much the bias is expected to drift (captured by w) and how noisy the measurement is (captured by v). In a nutshell:

$$w_n \approx \sqrt{\frac{W}{V}} = \frac{w}{v} \tag{40}$$

This relationship highlights that increasing the expected bias drift or decreasing the measurement noise results in a faster (higher w_n) filter response.

The Bode plots of the systems are shown in Figure 18. Since the estimated attitude $\hat{\theta}$ is expressed in radians, it is more appropriate to compare it with a version of the gyro measurement that has been integrated over time. By doing so, the resulting signal shares the same unit as the attitude estimate.
Figure 18a shows that the contribution of the SST measurement to the attitude estimate behaves like a low-pass filter. This means the Kalman filter prioritizes low-frequency information from the SST, which is typically more accurate, and attenuates its high-frequency noise. In contrast, Figure 18b shows that the contribution of the gyro behaves like a high-pass filter. The Kalman filter relies on the gyro for fast dynamics, where the bias has limited influence, while filtering out its low-frequency content, which may be corrupted by drift. This complementary behavior reflects the filter's strategy of optimally combining the two sources: using the SST for long-term stability and the gyro for short-term responsiveness.
It is important to notice that the natural frequency w_n plays a threshold role in that it represents the point after which the predominance of the two different behaviors is inverted.

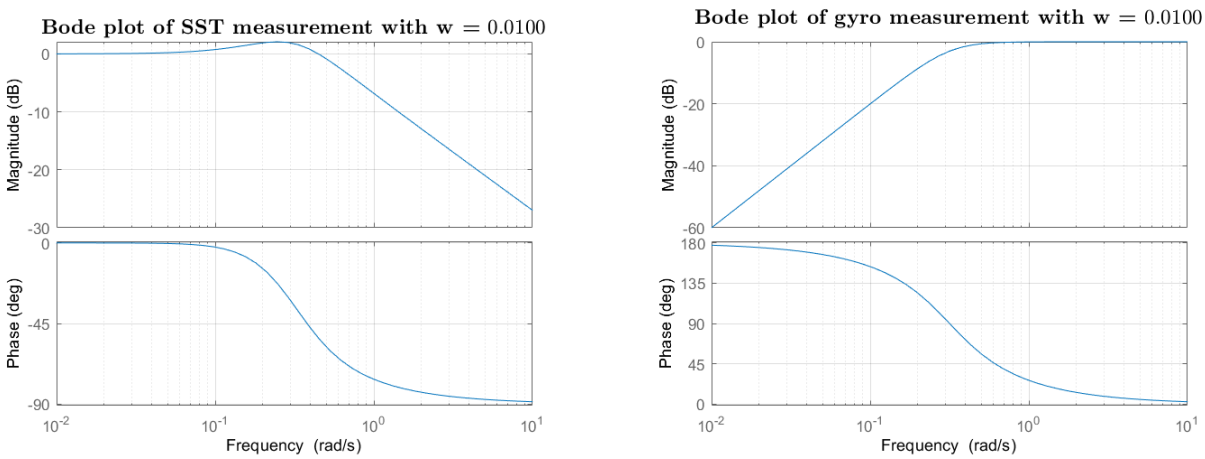

(a) Bode plot for SST measurement

(b) Bode plot for gyro measurement

Figure 18: Confront of time responses for two different values of w

2.1.c Standard deviations

In this section, it is asked to check that the standard deviations computed by the Kalman filter provide good confidence intervals in steady state. In other terms, the goal is to ensure that the estimated states $\hat{\theta}$ and $\hat{b}$ remain sufficiently close to the true values θ and b, ideally within a confidence interval of 3σ. This is done thanks to the following block in Simulink:

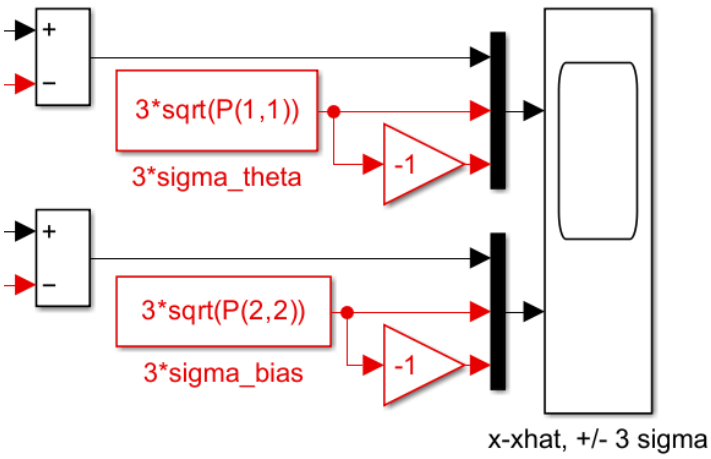

Figure 19: Block to plot the confidence levels about the sttitude and the bias

To better understand why the matrix P appears in the previous figure, it's helpful to know that it represents the uncertainty in the state estimates. This matrix, provided by the `kalman` function, contains information about how much the estimates are trusted. Its diagonal elements show the variance of the estimation error for each state: specifically, $P(1,1)$ relates to the uncertainty in the attitude estimate, and $P(2,2)$ to that of the gyro bias. By taking the square root of these values, we get the standard deviations σ, which offer a clearer sense of how uncertain the estimates are. These are then used to build a $\pm 3\sigma$ confidence interval, meaning there's a 99.7% chance the true value lies within this range (assuming the noise is Gaussian). This interval is shown in Figure 20 with dashed lines. The top plot shows the attitude estimation error $(\theta - \hat{\theta})$, while the bottom plot shows the bias estimation error $(b - \hat{b})$.

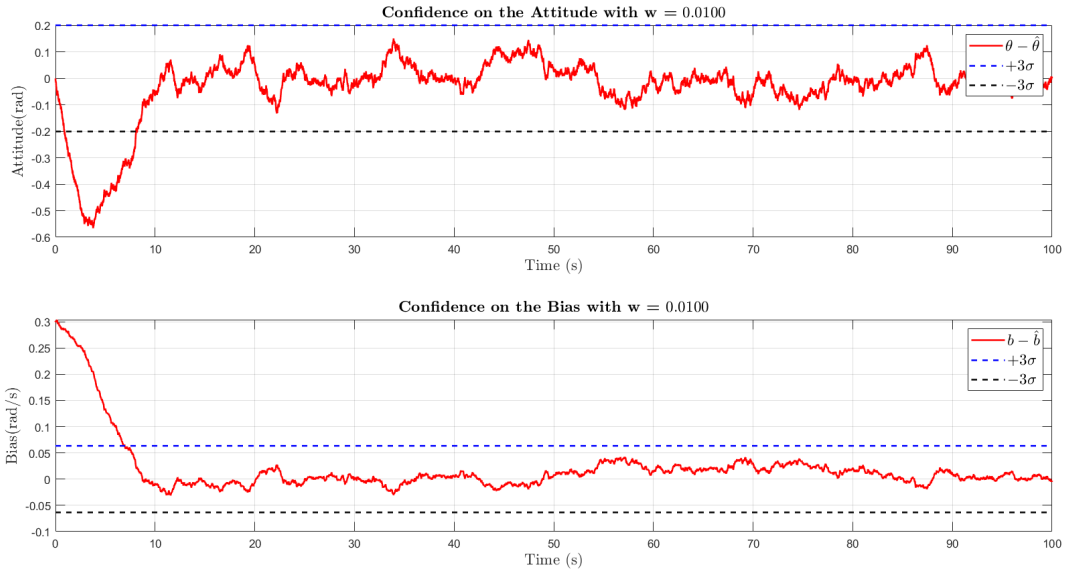

Figure 20: Confidences on the attitude and on the bias for $w = 0.01$

2.2 Discrete-time Kalman-filter

Now that the continuous-time Kalman filter has been simulated, one must study the discrete Kalman filter for more realistic applications in the case of its implementation in a satellite control loop for example. Indeed, embedded satellite control software programs will make use of C code, meaning that basic functions incorporated in Matlab will not be available.

2.2.a Derivation of the discretized Kalman filter

The discretization process starts by finding the matrix solutions to the state space model from **??**:

$$\begin{aligned} A_d &= e^{Adt} \\ B_d &= \int_0^{dt} e^{Av} B dv \\ C_d &= C \\ M_d &= I_n \\ V_d &= \frac{V}{dt} \\ W_d &\approx dtMWM^T \end{aligned} \tag{41}$$

One can then make use of the first order Taylor expansion to approximate A_d and B_d:

$$A_d = e^{AT_S} = I + AT_s = \begin{bmatrix} 1 & -T_S \\ 0 & 1 \end{bmatrix} \tag{42}$$

$$B_d = \int_0^{T_s} e^{Av} B dv = \int_0^{T_s} (I + Av) \cdot \begin{bmatrix} 1 \\ 0 \end{bmatrix} = \int_0^{T_s} \begin{bmatrix} 1 & -v \\ 0 & 1 \end{bmatrix} \cdot \begin{bmatrix} 1 \\ 0 \end{bmatrix} = \begin{bmatrix} T_S \\ 0 \end{bmatrix} \tag{43}$$

where v is equal to $v = (k+1)dt - \tau$ and T_S is the sampling time. The next step consists in computing the discretized Ricatti function, which will then be used to derive the Kalman gain:

$$P(k+1) = A_d P(k) A_d^T + M_d W_d M_d^T \tag{44}$$

Using the approximation of W_d and plugging it into the above equation seals the following:

$$\begin{bmatrix} p_1(k+1) & p_2(k+1) \\ p_2(k+1) & p_3(k+1) \end{bmatrix} = \begin{bmatrix} 1 & -T_S \\ 0 & 1 \end{bmatrix} \begin{bmatrix} p_1(k) & p_2(k) \\ p_2(k) & p_3(k) \end{bmatrix} \begin{bmatrix} 1 & 0 \\ -T_S & 1 \end{bmatrix} + \begin{bmatrix} 0 & 0 \\ 0 & T_S W \end{bmatrix} = \begin{bmatrix} p_1 - p_2 T_S - T_S(p_2 - p_3 T_S) & p_2 - p_3 T_S \\ p_2 - p_3 T_S & p_3 + T_S W \end{bmatrix} \tag{45}$$

Then, the Kalman filter can be deduced:

$$K_f(k+1) = C_d^T(C_d P(k+1) C_d^T + V_d)^{-1} = \begin{bmatrix} p1 \\ p2 \end{bmatrix} \cdot \frac{1}{p_1 + V_d} \tag{46}$$

The Kalman filter must then be applied to the prediction to act as the correction factor.

$$\hat{x}(k+1|k+1) = \hat{x}(k+1|k) + K_f(k+1)(y(k+1) - C_d\hat{x}(k+1|k) - D_d u(k+1)) \tag{47}$$

In addition to that, the Ricatti parameters themselves must also be updated once more at the timestep k+1:

$$P(k+1|k+1) = (I_n - K_f(k+1)C_d)P(k+1|k) = \begin{bmatrix} (1-k_1)p_1 & (1-k_1)p_2 \\ (1-k_1)p_2 & -p_2k_2 + p_3 \end{bmatrix} \tag{48}$$

In a nutshell, the discrete Kalman filter computation process is done in such a way that the A and B matrices of the Kalman model state space system are Taylor approximated, following by an approximation of W. Then, the Ricatti covariance parameters must be updated twice, once in the prediction process and another time in the correction process. Using the Ricatti parameters from the prediction process, the Kalman gain parameters are updated, and then implemented in the Kalman filter equation to act as a correction factor. This loop is then repeated over the specified timerange.

2.2.b Study of the steady Kalman gain filter

Now that the discretized computation process has been described, one can study the steady state Kalman filter values. In the first place, the steady state filter can be computed by implementing the matrices from the continuous Kalman space state model into the **lqed** function:

$$[K_f, P] = lqed(A, M, C, W, V, dt) \tag{49}$$

One must keep in mind that the **lqed** function also extracts the components of the covariance matrix P. The obtained steady state Kalman gain values k1 and k2 are equal to **0.0111** and **-0.0025**. One must keep in mind the **lqed** function has all the formulae mentioned in subsubsection 2.2.a embedded in it, meaning that one would expect the resulting Kalman gains to be identical to the ones obtained from the Matlab/Simulink code developped for the discrete section. Figure 21 represents the evolution of the gains of the simulation period:

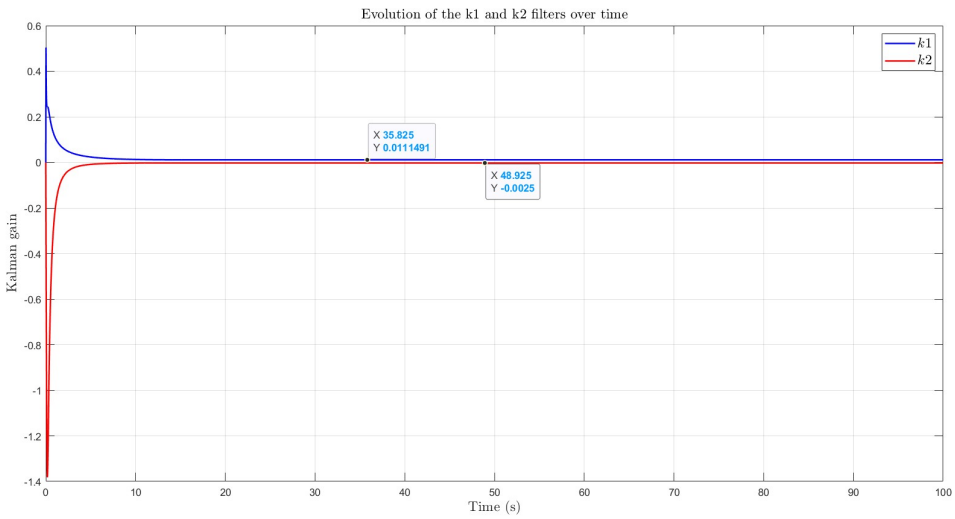

Figure 21: Evolution of the of k1 and k2 Kalman gains over 100 seconds

The steady state values k1 and k2 extracted from the Simulink are equal to **0.0111** and **-0.0025**, confirming the expectation that they would be exactly identical to the outputs of the **lqed** function.

2.2.c Study of the variance p30 influence on the transient response

This section will study the influence the variance component $p30$ on the bias estimator (or also $p3$) of the P covariance matrix has on the transient response.

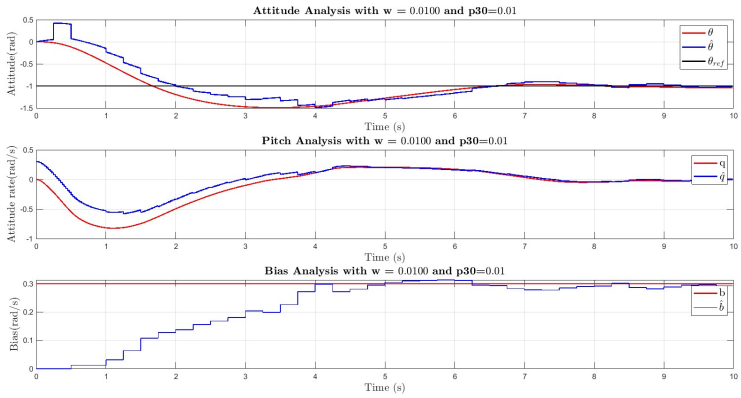

(a) Transient response (first 10 seconds) for a $p30$ variance of 0.01

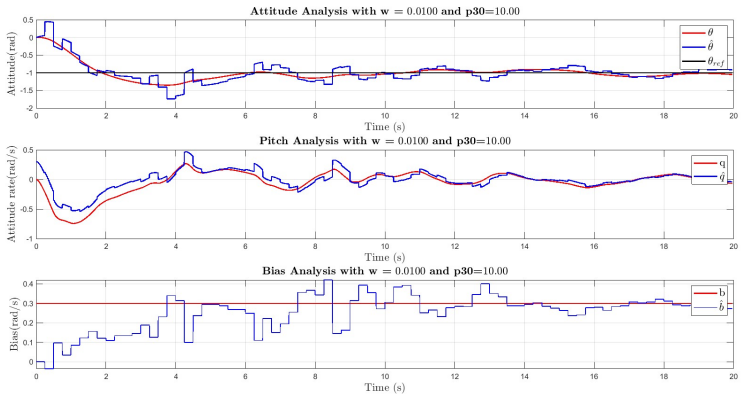

(b) Transient response (first 20 seconds) for a $p30$ variance of 1

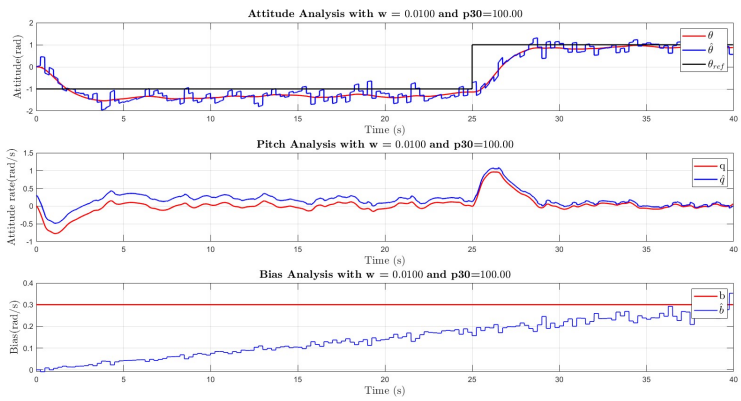

(c) Transient response (first 40 seconds) for a $p30$ variance of 10

Figure 22: Transient responses for three different $p30$ values: 0.01, 1 and 10

From these three plots, it is obvious that the main graph affected by $p30$ is the bias plot. Indeed, for a variance of 0.01, the estimated bias converges to the true bias within 4 seconds. A variance of 1 makes the curve converge in even less than a second. For a variance of 10, the time of convergence is 4 seconds, however, the estimated bias describes a lot of overshoot when it reaches the true bias value. Looking back at the derived discretized

equations of the Kalman filter, one notices that $p30$ affects the value of $p3$ and $p2$, which in turn have an impact on the Kalman gain value k2. The Kalman gain value k2 is then used in the correction process of the estimated bias $\hat{b}$, hence explaining why the bias is mainly affected. The overshoot for the high variance on the estimation bias can be related to the fact that the Kalman gain k2 is very high. In the case where the variance on the estimation bias is too low, the convergence time of the estimated bias increases with respect to an "ideal" $p30$ variance of 1.

2.2.d Study of the parameter w influence on the steady-state response

The next parameter to be studied is the impact of the process noise w on the steady state response of the models.

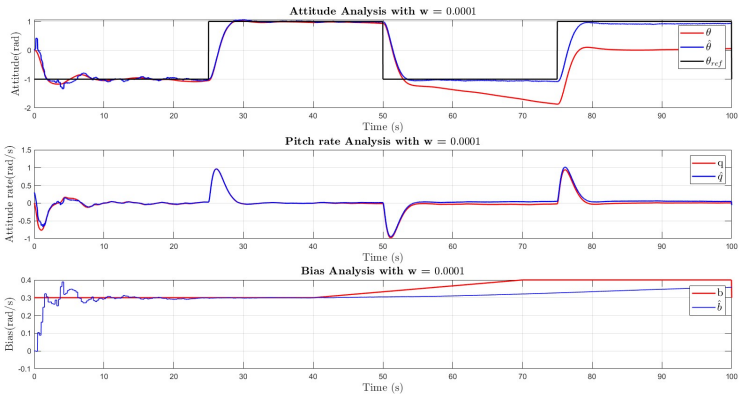

(a) Steady state response for a w parameter $0.0001 m/s^2/\sqrt{Hz}$

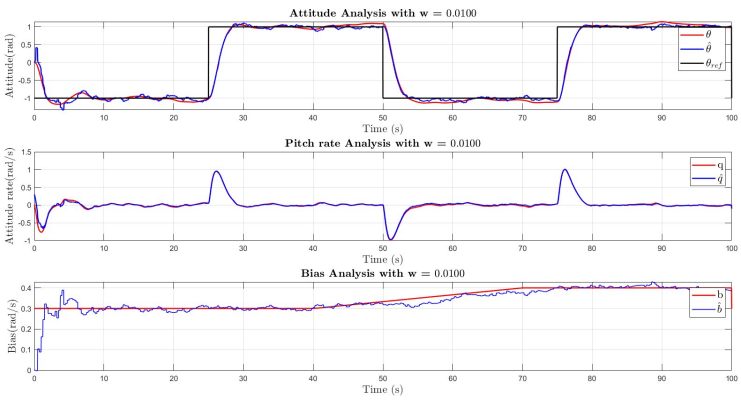

(b) Steady state response for a w parameter $0.01 m/s^2/\sqrt{Hz}$

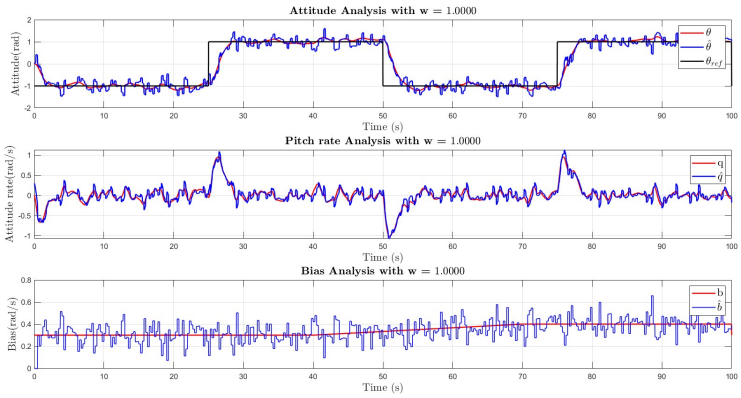

(c) Steady state response for a w parameter $1m/s^2/\sqrt{Hz}$

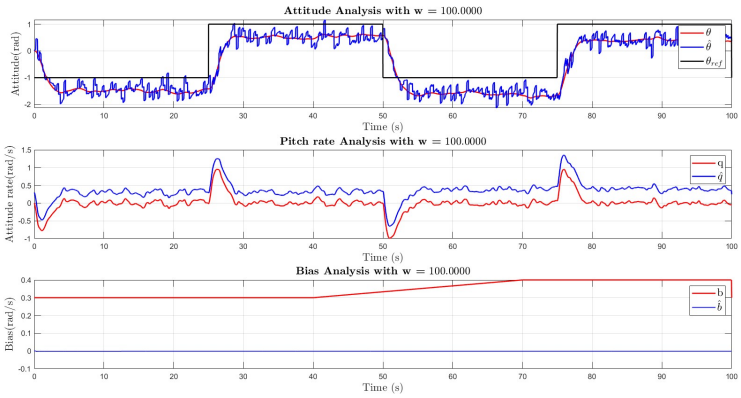

(d) Steady state response for a w parameter $100m/s^2/\sqrt{Hz}$

Figure 23: Transient responses for different w values: 0.0001, 0.01, 1, and $100m/s^2/\sqrt{Hz}$

From the four following figures, the main feature that is affected by the changing w parameter is the smoothness of the estimated parameter curves. For a process noise of 0.0001 $m/s^2/\sqrt{Hz}$, the change in bias is followed very slowly, to the point where it still has not attained the new value after 100 seconds. At 0.01 $m/s^2/\sqrt{Hz}$, the change in bias occuring between 40 and 70 seconds is followed, although with a slight lag between 50 and 60 seconds. At 1 $m/s^2/\sqrt{Hz}$, the change in bias is followed, but the overshoot is much more significant. At 100 $m/s^2/\sqrt{Hz}$, the bias estimator simply does not follow the true bias anymore, meaning that both the estimated pitch rate and attitude are not estimating correctly their true associated values. The bias drift therefore plays a role on two main factors, the smoothness and the reactivity, which can also be understood as the ability to quickly adapt to any change in the true bias. The smoother the signal, the lesser reactive it becomes, and vice versa. The optimal bias drift is at 0.01 $m/s^2/\sqrt{Hz}$.

2.2.e Study of the impact of the stellar sensor loss

Finally, the study on the impact of a loss in the SST measurement will be made. A loss in the SST measurement may occur because of the inability of an instrument to perform the measurements, one of the reasons could be the malfunction of the star tracking mechanism. The results of such a loss can be found in Figure 24:

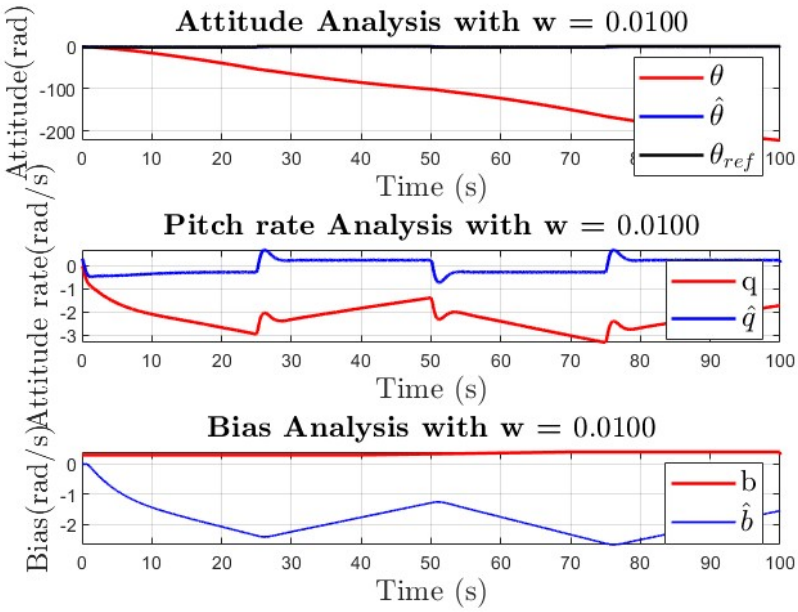

Figure 24: Effect of the SST loss on the time responses.

As one could expect, the estimated bias, pitch rate, and attitude gradually drift away from the true values. Because the bias is not estimated correctly, the pitch rate, which is deduced from the bias (as $\hat{\theta}(k+1) = \hat{\theta}(k) - T_s\hat{b}(k) + T_s\theta(k)$), will also differ, along with the attitude. This drift can potentially cause catastrophic failure of the system, as the estimated values do not correspond to the real time values anymore. To confirm this tendency, the standard deviation with and without a SST loss are plotted:

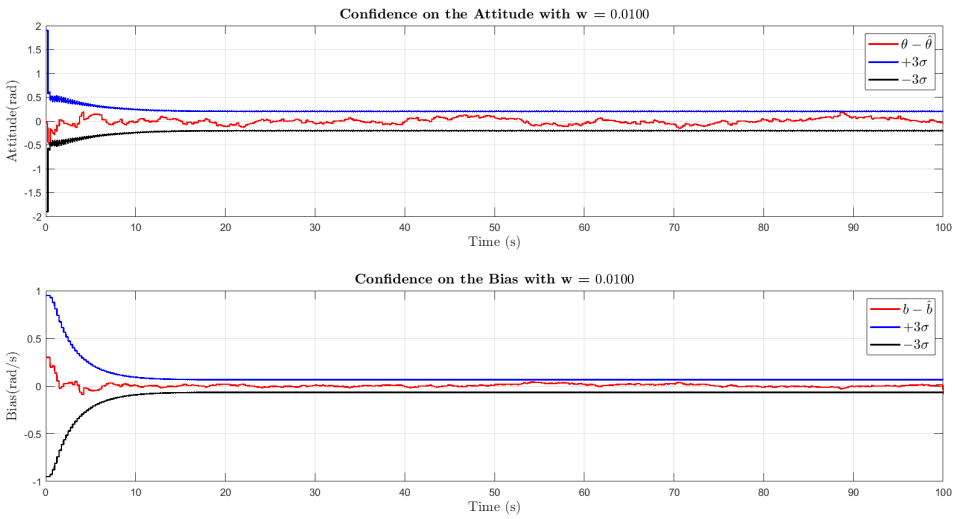

(a) Confidence on the attitude and bias in a nominal case (no SST loss)

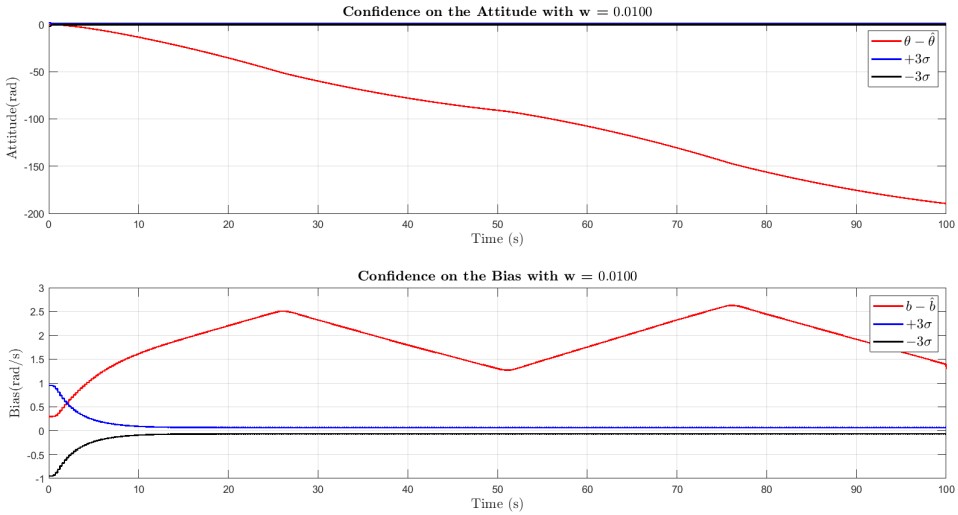

(b) Confidence on the attitude and bias in a non nominal case (with SST loss)

Figure 25: Confidence on the attitude and bias in a non nominal and nominal case

Without surprise, with the loss in the SST measurement, the difference between the estimated and true values falls outside the 3σ confidence interval, hence confirming the idea that such a loss would lead to catastrophic consequences in a real time mission. In case such a loss were to occur, one would have to add redundancies to ensure that at least one SST provides correct measurements.